SIKU VNV 1B 80 KV SERIES



Low-noise and reliable centrifugal fan with a plastic housing for flush-mounted wall mounting in kitchens, bathrooms, sanitary rooms, storerooms and residential areas.

PRODUCT DESCRIPTION

- suitable for premises with mono-pipe ventilation systems
- suitable for recessed wall mounting
- compatible with Ø 80 mm air ducts
- the front panel (removable) and the grill (unscrewable) are made of high quality and robust ABS plastic
- the connection to the main ventilation shaft is made via a flexible ventilation pipe
- Two- or three-stage economy mode with minimum energy consumption the speed switching is done by manual speed control (not included in delivery)
- fully automatic maintenance of the conveying pressure and air flow in the ventilation pipe
- maximum air temperature of 50°C
- including overheating protection

IP55

TECHNICAL DATA

MODELS	SPEED	VOLTAGE 50/60 HZ	POWER CONSUMPTION	CURRENT	NUMBER OF REVOLUTIONS	AIR FLOW RATE	SOUND PRESSURE LEVEL AT 3 M	WEIGHT	IP
SIKU VNV 1B 80 KV	1	220-240V	15 W	0,12 A	890 min-1	35m³/h	27 dBA	2,7 kg	IP55
	2		44 W	0,18 A	1830 min-1	102m³/h	46 dBA		

DIMENSIONS

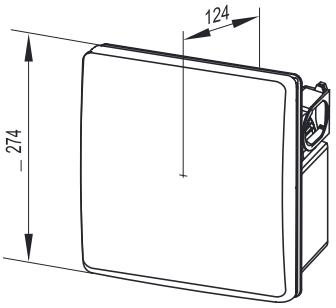

PERFORMANCE CHART

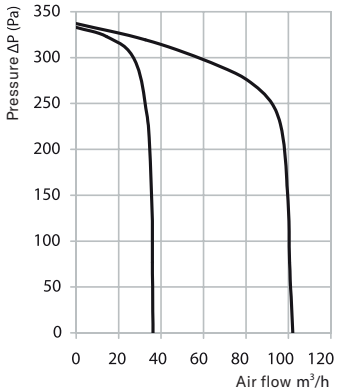

Printing errors, mistakes and technical changes reserved.

MODIFICATIONS

SIKU VNV 1B 80 KV H is equipped with a ball bearing motor and a humidity sensor. Depending on the type of connection, the fan is switched off or runs at speed 1. The fan switches to speed 2 when a preset humidity of 60% to 90% is reached. The fan switches off when the humidity falls below the set value by 10%. When the light in the room is switched on, the fan switches to Speed 2 with a switch-on delay of 50 seconds. Its operating time is set with a controller from 2 to 30 minutes.

SIKU VNV 1B 80 KV TR has an adjustable timer. Depending on the type of connection, the fan is switched off or runs at speed 1. When switched on with the external switch, the fan switches to speed 1 after the adjustable switch-on delay of 0 to 150 seconds has elapsed. After switching off, the fan continues to run at the 2nd speed for 2 to 30 minutes and then automatically returns to its initial state.
The operating time of the fan and the switch-on delay for Speed 2 are set with a built-in controller.

APPLICATION EXAMPLES

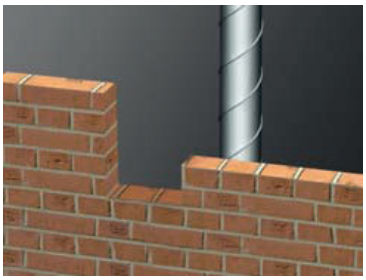
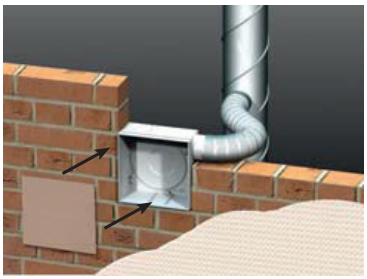
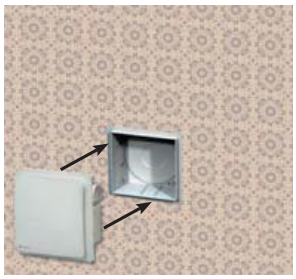


- The casing of the fan is to be assembled and connected to a main ventilation duct during the general construction phase. The cable form connection of the fan unit is routed through a special opening in the housing.

  The front side of the fan unit is to be covered with a protective cover to prevent ingress of dust and dirt.

  After the completion of the renovation work, the protective cover must be removed and the fan unit, which must be connected to the derived electrical installation, installed in the housing.

- Several fans can be operated simultaneously in one ventilation shaft. The housing enables the connection of additional sockets for the ventilation of a neighboring room.

AVAILABLE MODELS	ITEM NUMBER	PACKAGING UNIT
SIKU VNV 1B 80 KV TR	(Item no. 30606)	4 Pcs
SIKU VNV 1B 80 KV H	(Item no. 30607)	4 Pcs

ACCESSORIES

Filter G4 for centrifugal fans VNV	(Item no. 50519)	1 Pcs

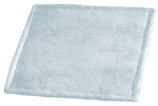

CONTROLLER



CLAMPS

